Enhancing Engineering Students' Troubleshooting Skills

Bill Diong, Ph.D.
Professor of Electrical Engineering
Department of Electrical Engineering

Craig Chin, Ph.D.
Associate Professor of Electrical Engineering
Department of Electrical Engineering

Sandip Das, Ph.D.
Associate Professor of Electrical Engineering
Department of Electrical Engineering

Ayse Tekes, Ph.D.
Assistant Professor of Mechanical Engineering
Department of Mechanical Engineering

Walter Thain, Ph.D.
Associate Professor of Electrical Engineering
Department of Electrical Engineering

Abstract

Based on observations by several Engineering faculty over the past few semesters, many senior design projects would have been more successful if students were able to more quickly identify and resolve the technical issues that they encountered. Troubleshooting skill is an important and integral part of good engineering practice. This skill represents the ability to identify and fix a problem within an engineered system by strategizing the approach within a time-constrained setting. To address this weakness, several Engineering faculty members formed a learning community to develop an initiative to better prepare students for troubleshooting tasks. This should help them not only achieve greater success in their senior design project, but also better prepare them for the workforce and successful careers. Hence, successfully achieving the aims of this initiative will also help KSU carry out the part of its mission to 'contribute to economic development'.

Recent work on conceptual-mapping-based active learning, which is closely related to this study on enhancing Engineering students' troubleshooting skills, discussed how that approach can help STEM students improve their diagnostic skill, i.e., ability to identify the problem in the technical system accurately within a certain time frame. Conceptual mapping includes content and process knowledge in determining the strategy to identify and resolve technical problems in complex systems.

The proposed interventions to develop students' troubleshooting skills include mini-lectures and lab exercises for the required courses regularly taught by this faculty group: six Electrical Engineering (EE) courses and one Mechanical Engineering (ME) course. Since some of these courses are also required by other majors, the proposed interventions – when fully integrated into the courses – will impact 2/3 of the Engineering college's students. The work-in-progress versions of these mini-lectures and lab exercises are documented in this paper and serve as the basis for more fully developed versions that better follow the approach of conceptual-mapping-based active learning. These will be trialed in their respective courses during the next academic year.

Introduction/Background

Several definitions and descriptions of the term "troubleshooting" have been presented in literature. An example of this is Jonassen and Hung (2006), who define troubleshooting as a common form of problem solving that requires an individual to diagnose faulty systems and take direct, corrective action to eliminate any faults in order to return the systems to their normal states. Perez (1991) described troubleshooting as a task that deals with problem-solving skills that are specific to a domain such as computer programming, engineering, biology, medicine, or psychology. Further, he described the task of troubleshooting as locating the problem or malfunction in a system that is not working properly and then to repair or replace the faulty part

or component. Schaafstal, Schraagen, and Van Berlo (2000) explained that troubleshooting is predominately a cognitive task that includes the search for likely causes of faults through a potentially enormous problem space of possible causes. In addition to fault detection or fault diagnosis, troubleshooting usually involves the repair or replacement of the faulty device. Additionally, Jonassen (2003) pointed out that troubleshooting was a "process requiring system knowledge, conceptual knowledge of how a system is supposed to function, an understanding of effective problem-solving procedures, and an ability to manipulate effectively the problem space to minimize extraneous information." Based on these definitions and descriptions, an alternative working definition for troubleshooting would be a type of problem solving that analyzes a faulty system to identify the fault(s) in the system and then pursue the appropriate procedures to correct the fault(s) in a timely manner.

Engineering is one of the domains where well-developed troubleshooting skills can frequently make a substantial impact, e.g., when an engineer finds and fixes a problem that has shut down a mass transit line. Significantly, it has been observed that the engineers entering industry have poorly developed troubleshooting skills because they lack hands-on experience along with underuse of test equipment in the typical U.S. undergraduate engineering curriculum (Rivera-Reyes & Boyles, 2013). More recently (in 2018), the same observation was repeated by a member of the KSU EE department's Industry Advisory Board - during an on-campus meeting - whose company hires many KSU engineering students and graduates as interns and full-time employees, respectively. Thus, it is necessary to enhance the troubleshooting skills of our engineering students by providing them with instruction and hands-on experience resolving problems that result in malfunctioning systems. Such skill can be more readily developed in laboratory/design environments as compared to the traditional lecture-based classroom environment.

As a first step for the FLC study, an extensive literature search of the American Society of Engineering Education's (ASEE's) Papers on Engineering Education Repository (PEER) database was carried out to find papers closely related to the current study which can provide guidance for this research. Six key papers were identified and thoroughly reviewed to provide a foundation for the study. The following paragraphs summarize the findings of this literature review.

Delvicario et al. (2018) integrated troubleshooting exercises into fundamental DC electric circuits labs for first-year engineering students to improve their critical thinking and troubleshooting skills, help them perform better in other labs and projects, and better understand the theory introduced in the lectures. Over three sessions, students investigated several scenarios in which the given circuits were not working to identify and fix one or more deliberately introduced faults, with the circuit's complexity increasing as the semester progressed. After each session, instructors used the students' troubleshooting plans based on the given list of possible faults, and their lab reports documenting actions, discussions and conclusions, to evaluate students' critical thinking skills using a custom-designed rubric. The instructors' evaluations indicated that 38% of students showed significant (> 10% of rubric score) improvement in

troubleshooting skills over the three sessions, and students' surveys reported 86% of students agreed that the troubleshooting exercises helped them improve their troubleshooting skills.

Lin et al. (2017) discussed how conceptual-mapping-based active learning can help STEM students to improve their diagnostic skill, which is required to accurately identify the problem in a complex technical system within a certain time frame. Conceptual mapping includes both content knowledge and process knowledge in determining the strategy to identify and resolve the technical problem in complex systems. Lin assessed conceptual mapping-based active learning in an NSF funded project at five institutions by developing two training modules containing a fault diagnosis problem from industry and about 100 students from engineering technology programs participated in it. The project compared the correlation between the concept maps developed by experts and those developed by students, which was the key indicator of students mastering the diagnosis principle and procedure.

Woods (2006) listed several key skills for troubleshooting problems: knowledge about a range of process equipment, knowledge about the properties, safety and unique characteristics of the specific process conditions where the trouble occurs, system thinking, and people skills. Woods also pointed out that knowledge about the domain, common faults and typical error causes, and their occurrence frequency help to build strong troubleshooting skills.

Troubleshooting has become an effective tool for non-engineers also to learn technical knowledge and narrow the gap between industry needs and workforce competencies (Tafur et al., 2012). Students should understand the importance of troubleshooting skills as this can help them to succeed in a course as well as at their workplace in the future. Jansson and Kelley (2012) introduced a weekly rotation of lab notebook recording duties to ensure that all students would be active participants in the use of all laboratory equipment. This resulted in the students' skills and confidence in 13 out of 14 lab competencies tested being enhanced over the course of the semester; these skills include troubleshooting, the use of lab instruments and taking critical measurements.

Furthermore, Estrada and Atwood (2012) explained that the factors leading to the most frustration among students are difficulties with equipment and troubleshooting, difficulties with concepts from the theory, and confusing lab documents.

Based on the findings from our literature review, we propose the introduction of new mini-lectures and lab exercises that are related to troubleshooting, similar to what was implemented and reported by Delvicario et al. (2018), but our aim is to do this *at all levels of the Engineering curriculum*. Our pilot effort focuses mostly on the Electrical Engineering curriculum, which has six (6) required courses (not counting Senior Project) that have laboratory sections where the students can learn more (compared to past students) about troubleshooting, and then practice and sharpen their troubleshooting skills. Since some of these courses are required in other Engineering majors as well, it is anticipated that the scope of impact of these troubleshooting-related interventions will extend beyond the Electrical Engineering major, resulting in the improvement of the troubleshooting skills of other Engineering majors as well.

In the following section, we outline the proposed new approach and modifications for the targeted courses. Next, we present a preliminary assessment of the impact of the interventions (new instructional materials and/or lab exercises) on enhancing students' troubleshooting skills, as measured by surveys as well as the speed at which errors were identified and corrected in the end-of-semester "challenge" exercises. These help us to corroborate the improvements in students' troubleshooting skills with our interventions. In the concluding section, we discuss the implications of our results.

Proposed new approach & modifications

Electrical Engineering faculty have observed that many senior design projects couldn't meet the projects' initial objectives because students were not able to assess the likelihood of failure and estimate the time and effort required to fix it. Specific observations such as these led the authors to propose the new approach and curriculum modifications presented in this study. While there is vast literature about troubleshooting and engineering education, it is notable that a recent search of the ASEE PEER database did not identify any systemic efforts that emphasize the development of students' troubleshooting skills throughout ALL levels of an engineering curriculum. In contrast, we chose certain required courses for EE, ME and other engineering majors to achieve a broad and repeated impact, which are: EE 2301 (EE, CpE, MTRE majors), EE 2305 (ME majors), EE 2501 (EE, CpE, MTRE majors), EE 3401 (EE, CpE, MTRE majors), EE 3501 (EE majors), EE 3601 (EE majors) and ME 4501 (ME majors). Targeted Courses for this research are: EE 2301, EE 3401, EE 3601, ME 4501.

Interventions

In this research study, we investigate whether the newly implemented instructional materials and/or assignments helped engineering students develop their troubleshooting skills. The total number of students expected to participate in this study is 200. The planned interventions for enhancing students' troubleshooting skills are new mini-lectures and lab exercises focusing on developing such skills. These new mini-lectures and lab exercises cover identifying and correcting common errors made by engineering students, e.g. those that EE students make while connecting components together to form circuits. Then lab exercise challenges, serving as troubleshooting competitions, will be held at the end-of-the-semester, with the speed at which the deliberate errors are identified and corrected by students recorded as the key performance data. In addition, pre- and post-intervention surveys will be administered to the students, who consented to participate in the lab exercise challenges, for their feedback on the new mini-lectures and newly designed lab exercises, to determine where impactful improvements can be made for their next iteration.

Data from the pre- and post-intervention surveys will be collected and analyzed using statistical methods to determine the impact of new instruction materials and/or lab exercises in developing students' troubleshooting skills throughout all levels of an engineering curriculum.

EE 2301 – Circuit Analysis I:

A troubleshooting laboratory exercise was designed to assess students' ability to diagnose open-circuit and short-circuit faults of a series-parallel circuit using standard circuit analysis laboratory equipment. Students were divided into groups of two or three and were presented with three series-parallel circuits. The fault-free state of each circuit was the same, and this state was obtained via a simulation exercise prior to the troubleshooting exercise. However, each circuit contained a unique fault that caused it to produce measurements inconsistent with the fault-free state. The mean and standard deviation of the time it took each group to successfully troubleshoot each circuit are given in Table 1.

Table 1. Troubleshooting Times.

Circuit Configuration Number	Mean Completion Time (s)	Standard Deviation of Completion Times (s)
1	212	197
2	282	247
3	183	157

The most notable result from Table 1 is the large standard deviations for each circuit configuration. This indicates that some students were very adept at identifying the circuit faults while other students were not. These results represent a control sample, but a treatment sample, where a troubleshooting intervention is performed prior to completing the troubleshooting exercise was not obtained due to the early end to the semester as a result of the covid-19 pandemic.

Future interventions could be developed based on Johnson's model for troubleshooting (Johnson, (1995)). This model consists of three steps: problem representation, fault isolation, and solution verification. The problem representation phase includes the initial evaluation of a system. A suitable intervention for this phase would be teach students how to develop concept maps of the system under investigation. An accurate concept map of the system should enhance a student's ability to isolate the fault(s). An intervention for the fault isolation stage would be to introduce students to effective methods for fault isolation: exhaustive, topographic, split-half and functional/discrepancy detection (Brown, et al, (1975)).

EE 3401 – Engineering Electronics:

The EE 3401 Engineering Electronics course introduces students to applications of operational amplifiers, diodes, bipolar junction transistors, and MOS transistors. Difficulties students have in the lab component of the course are attributed primarily to (1) lack of fundamental knowledge of circuit behavior, (2) the inability to use the oscilloscope correctly, (3) difficulty correlating

circuit schematic diagrams with physical solderless breadboard component layouts and (4) misunderstanding the solderless breadboard's internal connections. These difficulties negatively impact students' troubleshooting skills.

To begin addressing these problems, laboratory instructional material were modified and introduced to students in the fall 2019 semester. One of the most significant modifications was including more SPICE circuit simulations as part of the prelab assignments students completed before coming to lab. The intent was to augment numerical calculations with the waveform simulations that produced circuit output waveforms much like students would see with their breadboarded circuits. Another major modification was production of short videos that addressed lab test equipment operation with emphasis on the oscilloscope. The lab instructions themselves were edited to improve circuit schematic diagrams, clarify procedures, and include more comprehensive background theory.

To help determine the efficacy of the improved instructional material on students' troubleshooting abilities, two instructors offered an optional, extra-credit "troubleshooting challenge" at the end of the fall semester to their lab sections. The instructors taught both the classroom and laboratory components of the course. The challenge was divided into two parts. The first tested students' proficiency at using an oscilloscope. The second utilized an operational amplifier circuit with students performing theoretical calculations, constructing the challenge circuit, and measuring circuit waveforms. The two parts were each timed. Twenty four students participated in the challenge.

Results were evaluated, and course extra credit awarded according to the correct responses students had, which was their main objective in taking the challenge. The instructors assessed the results to establish a troubleshooting performance baseline and develop an improvement plan for lab instruction methodologies and revisions to the troubleshooting challenge. The spring 2020 version was modified to include a survey assessing students' opinions of the instructional material and their troubleshooting capabilities. The modifications were also designed to bring the troubleshooting challenge into compliance with KSU's guidelines on human subject research so that results could be disseminated.

Unfortunately, the COVID-19 epidemic and resulting shift to online instruction forced the implementation of an online troubleshooting challenge. Students did not have access to test equipment and so the spring semester's challenge was completely different than the fall challenge and therefore results were difficult to compare.

The Spring semester online troubleshooting challenge was administered through an online quiz in the D2L (Desire to Learn) learning management system. The challenge consisted of 12 questions worth a total of 18 points). Students could earn up to 3 extra credits points toward their final course grade by taking this optional quiz. Thirty out of 36 engaged students (about 83%) in the class participated in the troubleshooting challenge quiz. It is to note that this online

participation in 2020 spring semester for the troubleshooting challenge was much higher than the physical in-lab troubleshooting challenge held in fall 2019.

The online troubleshooting quiz questions comprised of snapshots of circuits built on a breadboard, LTspice simulation results, oscilloscope screenshots, and circuit schematics. Students were challenged with various troubleshooting tasks, such as (1) identify the type of different amplifier circuits by investigating the circuit diagram or by analyzing input/output waveforms (2) identify wrong circuit connections, (3) identify the possible issues in a circuit by analyzing the output signal waveforms, (4) identify an unknown signal through analysis and calculations on a given circuit etc. The questions were designed to assess a wide variety of critical and fundamental troubleshooting skills that are required for excellence in an introductory analog electronics lab. A couple of the troubleshooting question examples are shown in the figure below.

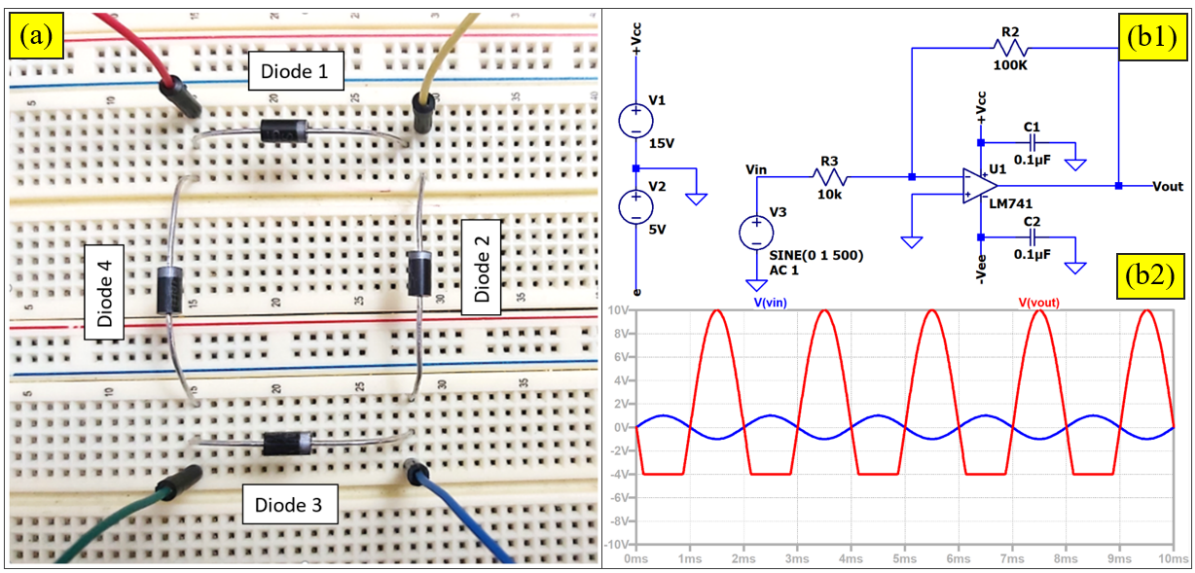

Figure 1. (a) Breadboarded full-wave bridge rectifier with wiring error, (b1) amplifier simulation circuit with incorrect negative power supply voltage, and (b2) resulting input (blue) and output (red) waveforms.

Figure 1(a) shows a full bridge rectifier breadboard circuit with a wrong connection. This type of connection mistake is very common in an introductory electronics or circuits course. Students were asked to diagnose the circuit visually and find if there were any connection issues. Similarly, as shown in figure (b1), the amplifier circuit schematic created in the LTspice circuit simulator was presented to the students along with the resulting output waveform of the amplifier as presented in figure (b2). Students were asked to analyze the given circuit to identify the possible reason(s) why the output waveform was distorted (the lower half was cut-off).

Since the modality, the student population, and the challenge questions were different in fall 2019 and spring 2020 semesters, a direct comparison of the assessment results cannot be made.

However, assessment results for both modes reflect some common areas of improvement and provides a qualitative understanding of the student skill levels in this course. Based on our preliminary assessment results, we plan to develop a rigorous troubleshooting skill improvement instructional pedagogy to implement in the future semesters.

With online instruction continuing in the summer 2020 semester, EE 3401 lab exercises are being rewritten to give students experiences that approximate hands-on labs. Even though students do not have access to lab equipment and are not required to breadboard circuits, the LTspice simulations are retained, and additional elements added. In particular, some lab exercises will have video measurement demonstrations, with students asked to assess the results. There will also be some online quiz questions that ask students to evaluate breadboard circuit layout photographs and look for wiring errors or other problems. After the return to on-campus instruction, it is expected that some of the developed online lab exercise content will be retained.

EE3601 – Electric Machines:

In the EE3601 Lab exercises, a common type of mistake that students make and then need to troubleshoot is the wiring connection error, even when the wiring diagram has been provided to them. Hence, the proposed challenge for these students is the circuit used for short-circuit testing of a Synchronous Generator, where a wiring error has been deliberately introduced. Students will be challenged individually, provided the wiring diagram and given the expected answers for the armature currents as the field current is stepped-up from 0 A. This was done during the last week of the Fall 2019 semester, and the time each student took to correctly identify and fix the wiring error was recorded as the performance metric for this challenge, with 30 minutes specified as the time limit for solving the challenge. Plans for the Spring 2020 semester were going to focus on selecting an appropriate approach for the mini-lectures and/or lab exercises, and then developing these materials for that semester's EE3601 students to enhance their ability to troubleshoot wiring connection errors. However, the pandemic severely curtailed those plans.

ME4501 – Vibrations & Controls Lab:

Engineering students should be equipped with problem solving skills as an undergraduate so that they will able to identify the problems, classify and prioritize the possible sources and draw conclusions after experiments (Rugarcia et al. (2000), Woods (1994), Glaser (1984)). As commercially available educational turn-key systems utilized in undergraduate level mechanical engineering laboratories are commonly equipped with their already developed software, students don't understand the signal process from the system input to the output and data collection (Tekes et al. (2018), Tekes et al. (2019)). They simply need to follow the instructions from their laboratory handouts and use the software to record and export data without necessarily making connections between the sensors and data acquisition card.

In this project, we are aiming to design new laboratory assignments for ME 4501 to enhance students' troubleshooting skills and also develop cost effective and portable laboratory equipment thereby giving the students the opportunity to assemble the system/mechanism, create connections between sensors and data acquisition cards and interpret the recorded data and analyze the sources of possible failures.

Conclusion

Being proficient at troubleshooting is an important skill for engineering students to develop, so they can identify and fix problems by a strategized, systematic approach within the time-constrained setting in which most engineering work takes place. KSU faculty have observed that in many senior design projects, the students underestimate the likelihood of errors in system design and prototyping, and the time and effort required to rectify such errors. In addition, employers of engineering students and graduates highly value those who are proficient at troubleshooting. Because of these reasons, the interventions proposed in this study were developed to hone students' troubleshooting skill at multiple points throughout the curriculum.

The proposed interventions are new mini-lectures and lab exercises, and the targeted courses for this study were selected to achieve broad impact. Therefore, the proposed interventions will impact 2/3 of the college's students (about 4500 students enrolled during Spring 2020) because these targeted Electrical Engineering courses are also required courses for Computer Engineering, Mechatronics Engineering and Mechanical Engineering majors. In the long-term, when fully implemented, this initiative will impact all of KSU's Electrical Engineering, Computer Engineering, Mechatronics Engineering and Mechanical Engineering students. Completing this proposed project will lay the groundwork for justifying a grant proposal to expand this initiative to other Engineering courses, and/or serve as a model for other universities. Moreover, it supports KSU's Mission Statement, which encompasses the aims to "contribute to economic development," and to "respond to public demand for higher education" (KSU Mission Statement).

References:

1. Brown, J. S., Burton, R. R., Bell, A. G. (1975). SOPHIE: A step toward creating a reactive learning environment. *International Journal of Man-Machine Studies,* 7(5), 675–696,

2. Delvicario, J., & Lauria, D. G., & Mellodge, P., & Yu, Y. (2018), *Promoting Critical Thinking Through Troubleshooting Exercises in Fundamental Electric Circuits Labs.* Paper presented at 2018 ASEE Annual Conference & Exposition, Salt Lake City, Utah. https://peer.asee.org/30905

3. Estrada, T., & Atwood, S. A. (2012), *Factors that Affect Student Frustration Level in Introductory Laboratory Experiences.* Paper presented at 2012 ASEE Annual Conference & Exposition, San Antonio, Texas. https://peer.asee.org/21386

4. Glaser, R. (1984). Education and Thinking: The Role of Knowledge. *American Psychologist*, 55, 2–21.

5. Jansson, P. M., & Kelley, D. (2012), *Increasing Hands-on Laboratory Equipment Experience via Rotation of Notebook Recording Duties.* Paper presented at 2012 ASEE Annual Conference & Exposition, San Antonio, Texas. https://peer.asee.org/21523

6. Johnson, S. (1995). *Understanding troubleshooting styles to improve training methods*. Paper presented at American Vocational Annual Convention, Denver, Colorado, December 1985

7. Jonassen, D. H. (2003). Instructional design for learning to troubleshoot. *Performance Improvement*, 42(4), 34–38.

8. Jonassen, D. H., & Hung, W. (2006). Learning to troubleshoot: A new theory-based design architecture. *Educational Psychology Review*, Vol. 18, No.1, March 2006.

9. KSU Mission Statement, https://www.kennesaw.edu/about/index.php, accessed on May 5, 2020.

10. Lin, Y., & Shahhosseini, A. M., & Badar, M. A. (2017), *Assessing conceptual mapping based active learning for advancing engineering diagnostic skills.* Paper presented at 2017 ASEE Annual Conference & Exposition, Columbus, Ohio. https://peer.asee.org/27620

11. Perez, R. (1991). A view from trouble-shooting. Toward a unified theory of problem solving, Chap. 7, pp. 115-153, Mike U. Smith (Ed.), Hillsdale, NY: Lawrence Erlbaum Associates

12. Rivera-Reyes, P., & Boyles, R. E. (2013), *Training in Troubleshooting Problem-Solving: Preparing Undergraduate Engineering Students for Industry.* Paper presented at 2013 ASEE Annual Conference & Exposition, Atlanta, Georgia. https://peer.asee.org/22646

13. Rugarcia, A., Felder, R. M., Woods, D. R., & Stice, J. E. (2000). The future of engineering education I. A vision for a new century. *Chemical Engineering Education*, 34(1), 16-25.

14. Schaafstal, A., Schraagen, J.M., & van Berlo, M. (2000). Cognitive task analysis and innovation of training. The case of structured troubleshooting. *Human Factors*, 42(1), 75-86.

15. Tafur, M., & Evangelou, D., & Strobel, J. (2012), *Troubleshooting Skills for Non-engineers in Technological Jobs.* Paper presented at 2012 ASEE Annual Conference & Exposition, San Antonio, Texas. https://peer.asee.org/22136

16. Tekes, A., Van Der Horn, K., Marr, Z., & Tian, C. (2018) "Dynamics, vibrations and control lab equipment design. Paper presented at ASME 2018 dynamic systems and control conference. American Society of Mechanical Engineers Digital Collection.

17. Tekes, A., Utschig, T., & Johns, T. (2019). Demonstration of vibration control using a compliant parallel arm mechanism. *International Journal of Mechanical Engineering Education*, https://doi.org/10.1177/0306419019887140.

18. Woods, D. R. (1994). Problem-based learning: How to gain the most from PBL. W L Griffen Printing.

19. Woods, D. R. (2006). Successful trouble shooting for process engineers: a complete course in case studies. Wiley-VCH Verlag GmbH & KGaA. Weinheim, Germany.